DMS
Bathroom Solutions
The comfortable performance & High designability

BRAVAT

PB8421454**

Built-in Bath & Shower Mixer Trim Set (1-function)

(Rough-in Dimensions):
(Unit): mm

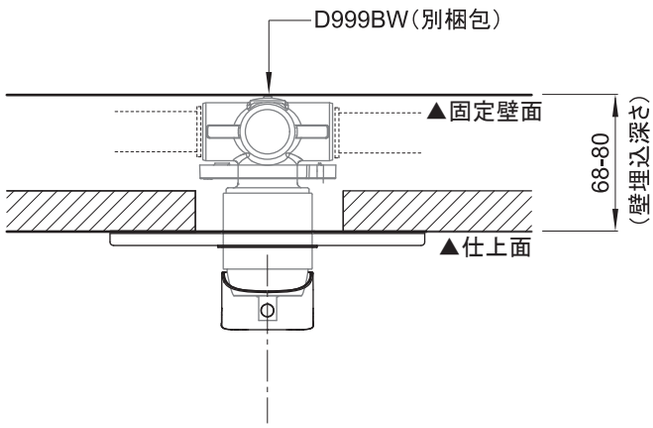

PB8421454BW

D999BW

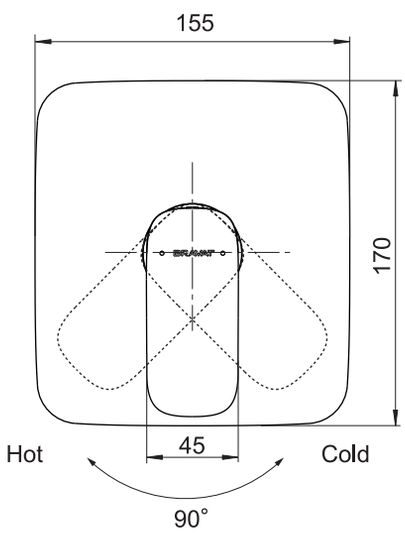

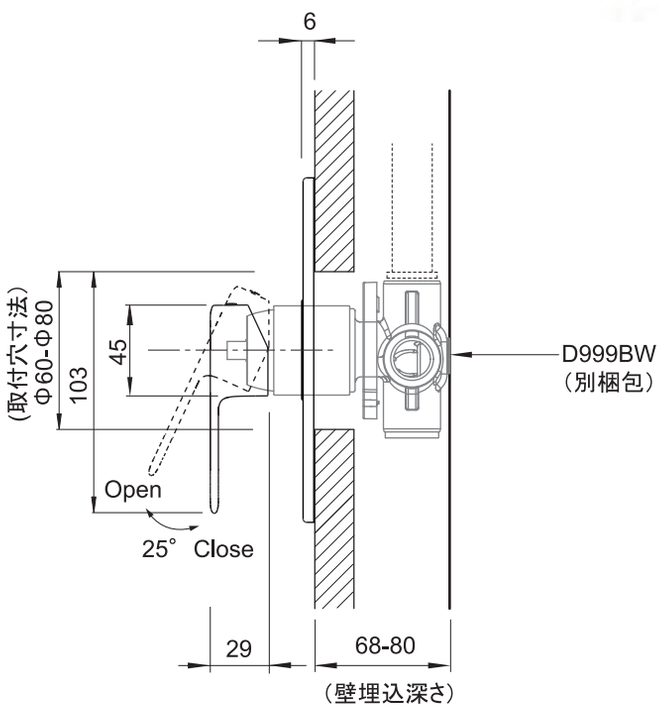

Item No.	PB8421454BW (1-way)
Available Color	ブラック
Materials	Brass
Cartridge	Ceramic cartridge
Aerator	-
Pressure	0.1-0.5MPa、推奨:0.3MPa
Remarks : 配管部品:D999BW付属(別梱包)	

101055035