DMS
Bathroom Solutions
The comfortable performance & High designability

BRAVAT

F565104C-1

3-hole Bath Mixer

(Rough-in Dimensions):
(Unit): mm

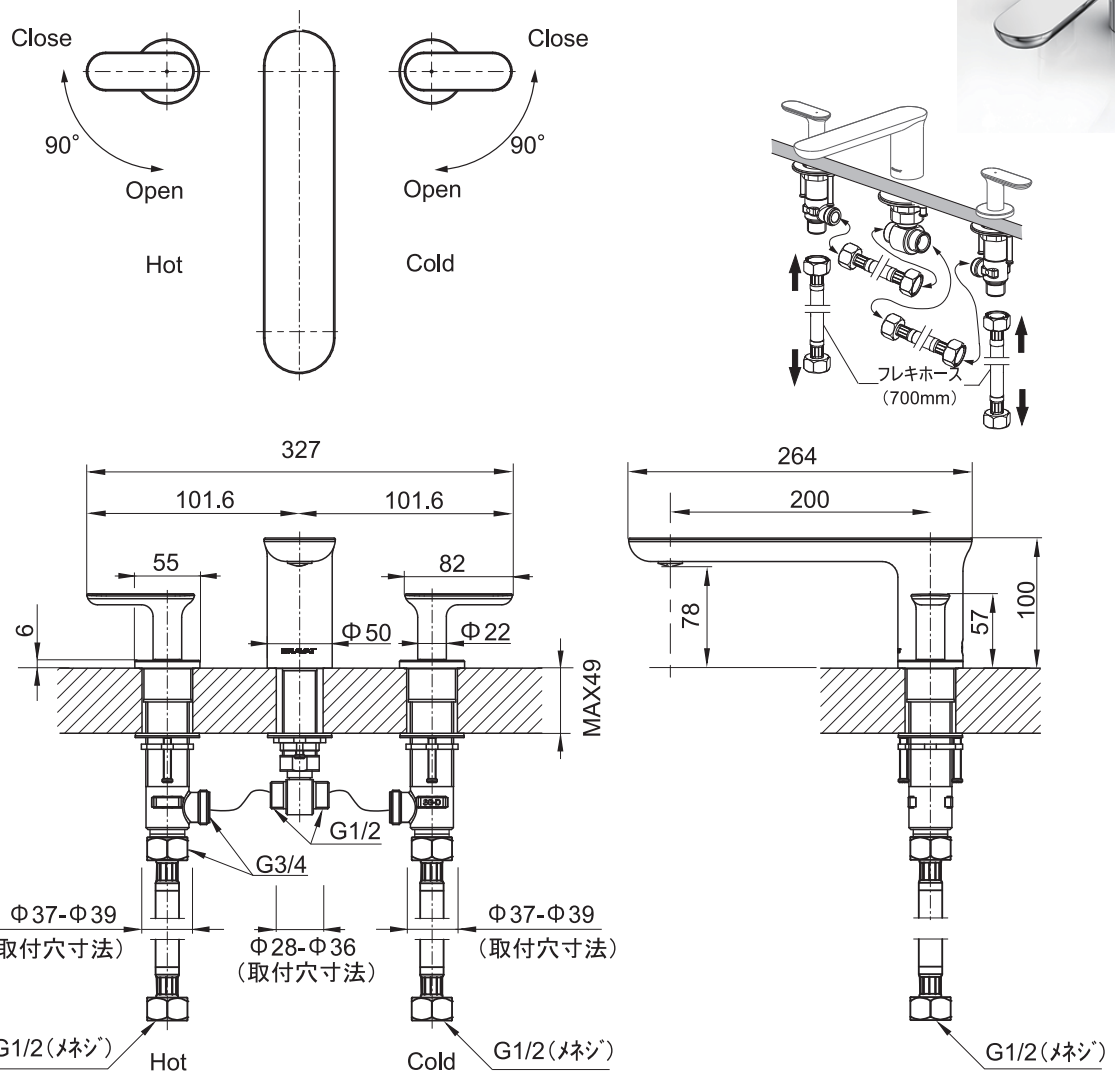

Item No.	F565104C-1
Available Color	ｸﾛｰﾑ
Materials	Brass
Cartridge	Ceramic cartridge
Aerator	Neoperl
Pressure	0.1-0.5MPa、推奨:0.3MPa、流量:21L/min(スパウト) @0.3MPa±0.02MPa

Remarks : SSフレキシブルホース付き(L=700、4本)

S72605A06

Design Management System co.,Ltd.