DMS
Bathroom Solutions
The comfortable performance & High designability

BRAVAT

F2568699BW

Single Handle 2-hole Basin Mixer

(Rough-in Dimensions):
(Unit): mm

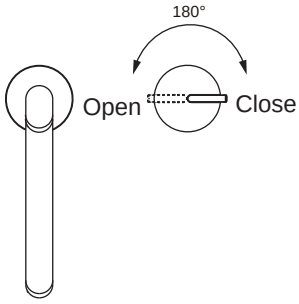

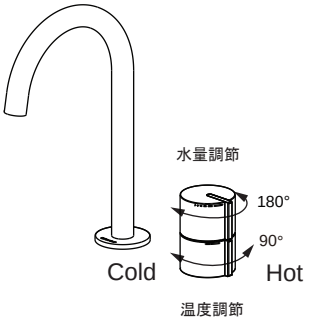

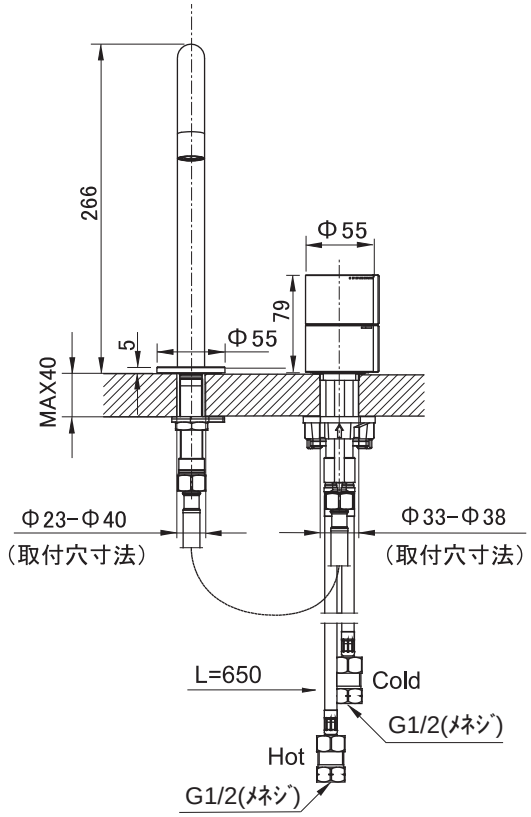

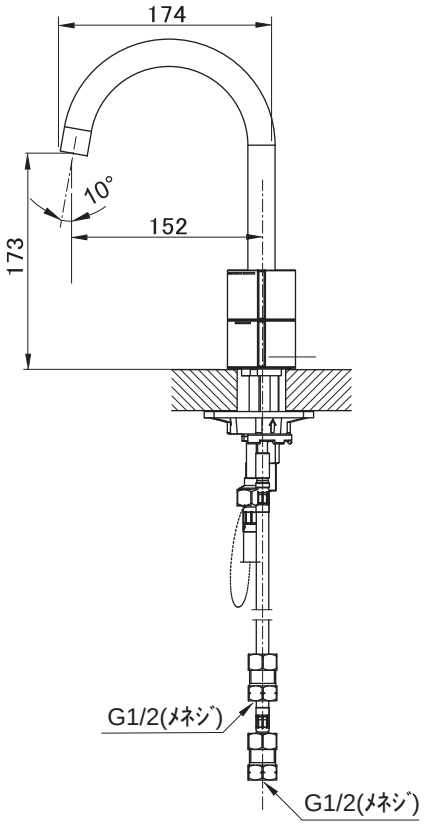

Item No.	F2568699BW
Available Color	ブラック
Materials	Brass
Cartridge	Ceramic cartridge
Aerator	Neoperl
Pressure	0.1-0.5MPa、推奨：0.3MPa、流量：3.0-9.0L/min @0.1MPa

Remarks : SSフレキシブルホース付き（L=650）

PE20230707JP02

Design Management System co.,Ltd.